ILLUMINATION (w/ DAYTIME RUNNING LIGHT)

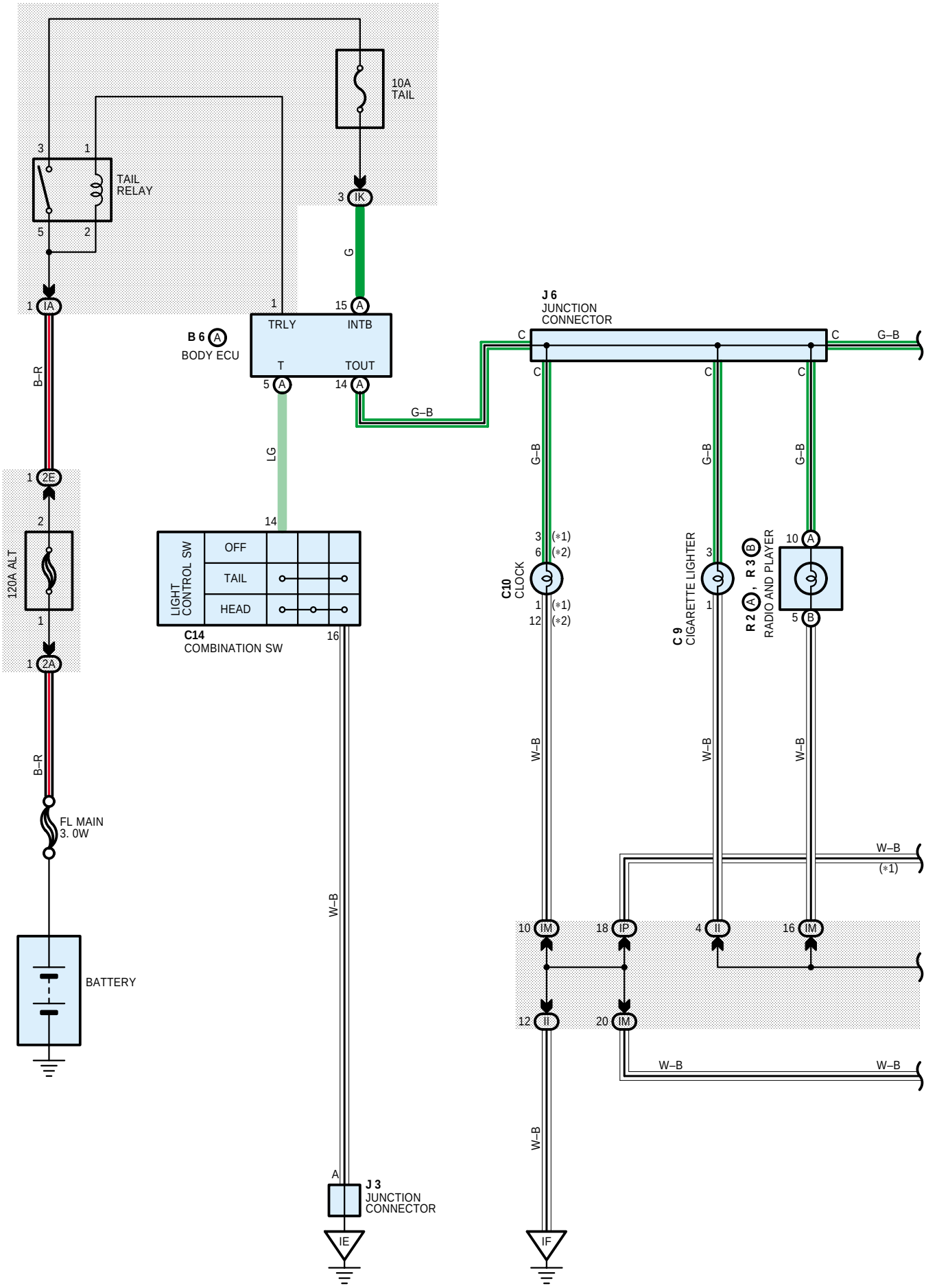

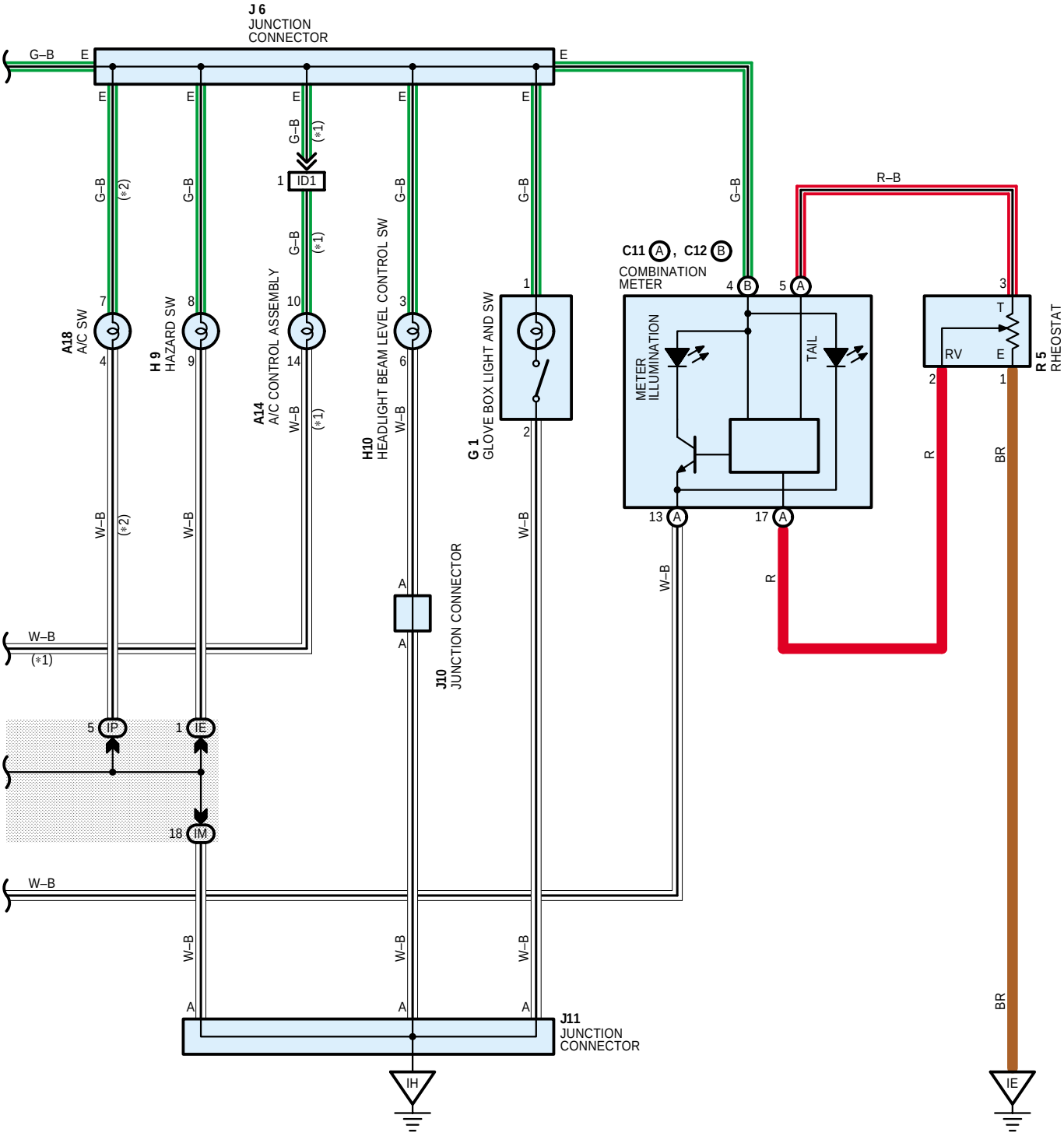
J 6
JUNCTION
CONNECTOR
G–B
E
A18
A/C SW
H 9
HAZARD SW
A14
A/C CONTROL ASSEMBLY
ID1
H10
HEADLIGHT BEAM LEVEL CONTROL SW
G 1
GLOVE BOX LIGHT AND SW
C11 A , C12 B
COMBINATION
METER
METER
ILLUMINATION
TAIL
R–B
R 5
RHEOSTAT
T
RV
W–B
R
BR
(＊1)
(＊2)
J10
JUNCTION CONNECTOR
IP
IE
IM
J11
JUNCTION
CONNECTOR
IH